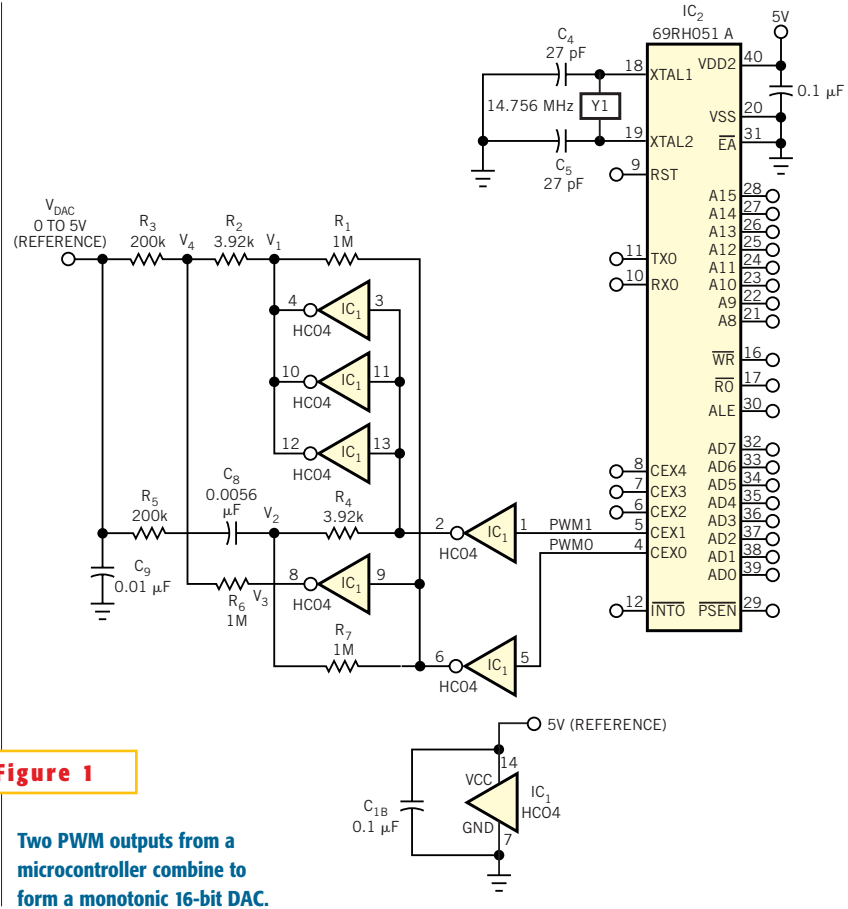

Figure 1

Two PWM outputs from a microcontroller combine to form a monotonic 16-bit DAC.