Figure 1

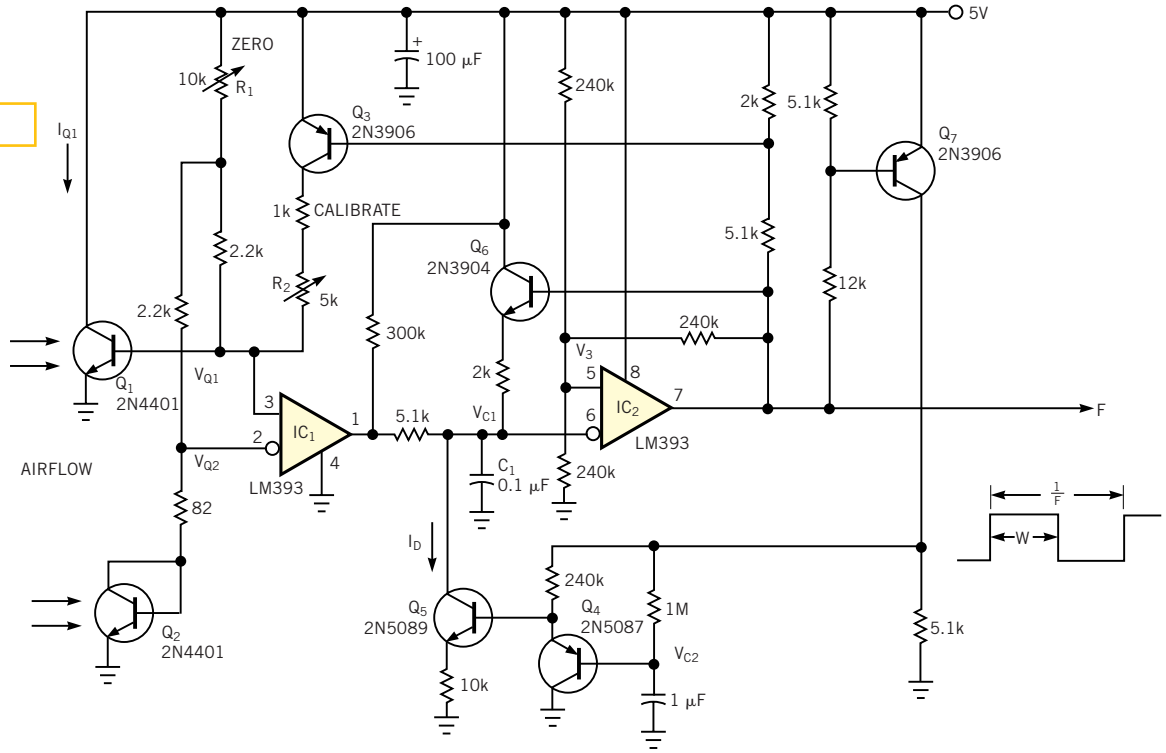

Using a simple transistor as sensor, this circuit yields a digitized, linear measurement of air speed.